prototypa

Hudcova 533/78c, 612 00 Brno
Czech Republic

tel: **+420 544 501 800**
fax: **+420 541 513 681**
email: **pzm@prototypa.cz**
www.prototypa.cz

BALLISTIC EQUIPMENT FOR PROTECTIVE MATERIAL TESTING

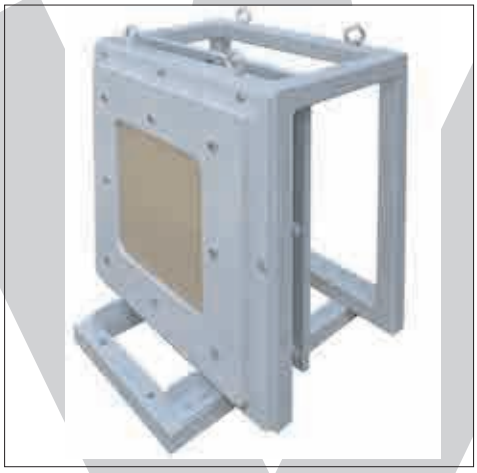

MAIN ACTIVITIES

- Research, development and production of the ballistic equipment for testing of the cartridges for hunting, sport or military weapons
- Testing of small arms and cannons at standard or worsening conditions.
- Testing of the protective materials

BUSINESS OFFER

- Testing protective material in accordance with the standards NIJ, STANAG and AEP
- Producing of ballistic equipment for testing of the protection materials (FSP).
- Testing of weapons and ammunition.
- Development and production of the prototypes of weapons.

CERTIFICATION

- Prototypa-ZM, s.r.o. is a holder of the quality management system certificate EN ISO 9001:2009 and AQAP 2110 (research, development and production in the area of weapons, ammunition and engineering equipment) as well as a holder of NATO codification supplier code 0461G.

prototypa
Hudcova 533/78c, 612 00 Brno
CZECH REPUBLIC
Tel: +420 544 501 800
Fax: +420 541 513 681
e-mail: pzm@prototypa.cz
www.prototypa.cz

TD-2014
Tumbler Drum

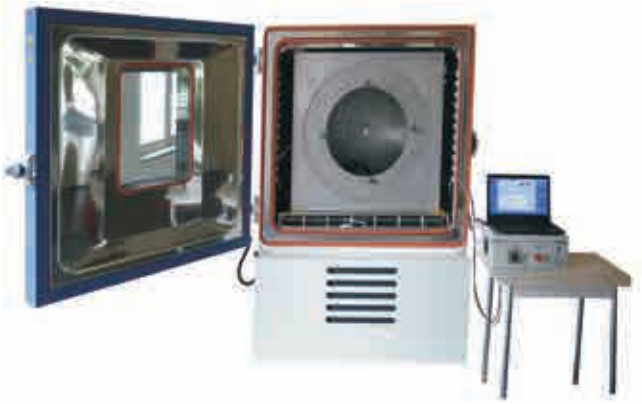

DESCRIPTION

The TD-2014 Tumbler Drum is designed for executing the flexible armor conditioning protocol according Ballistic Resistance of Body Armor NIJ Standard-0101.06. TD-2014 is placed inside climatic chamber WEISS WK3-1000/0.

TECHNICAL PARAMETERS

Height	926 mm
Length	960 mm
Width	850 mm
Total mass	150 kg
Tumbler drum inside diameter	832 ± 6 mm
Tumbler drum internal depth	651 ± 6 mm
Tumbler drum fins height	114 ± 3 mm
Test temperature	65 ± 2 °C
Test relative humidity	80 ± 5 %
Tumbler drum rotation	5 ± 1 rpm
Power supply	230V / 50-60 Hz
Power	800 W

Speed, temperature and humidity control by PC

Climatic chamber WEISS WK3-1000/0

TD-2014 Tumbler Drum - Side view

TD-2014 Tumbler Drum - Back view

Electronic box, computer and software

prototypa
Hudcova 533/78c, 612 00 Brno
CZECH REPUBLIC
Tel: +420 544 501 800
Fax: +420 541 513 681
e-mail: pzm@prototypa.cz
www.prototypa.cz

Backing Material Fixture
Backing Material Holder

DESCRIPTION

The backing material fixture is designed for executing of ballistic tests of resistance body armor against gunfire according NIJ Standard-0101.06 Ballistic Resistance of Body Armor.
The backing material holder is determinate for mounting of backing material fixture on target table.

Backing Material Fixture

TECHNICAL PARAMETERS

Backing Material Fixture

Inside dimensions	610 x 610 x 140 mm
Outside dimensions	640 x 640 x 160 mm
Total mass	102 kg
Backing material	Roma Plastilina No.1

Backing Material Holder

Dimensions	350 x 700 x 850 mm
Total mass	35 kg

Assembly of Backing Material Fixture and Backing Material Holder

Backing Material Holder

prototypa
Hudcova 533/78c, 612 00 Brno
CZECH REPUBLIC
Tel: +420 544 501 800
Fax: +420 541 513 681
e-mail: pzm@prototypa.cz
www.prototypa.cz

HADT-1
HARD ARMOR DROP TESTER

TECHNICAL PARAMETERS

Height	1575 mm
Width	500 mm
Length	500 mm
Total mass	130 kg

DESCRIPTION

The HADT-1 Hard Armor Drop Tester is designed for executing of stress test fragmentation for ballistc plates according NIJ 0101.06 Ballistic Resistance of Body Armor.

HADT-1 - side view

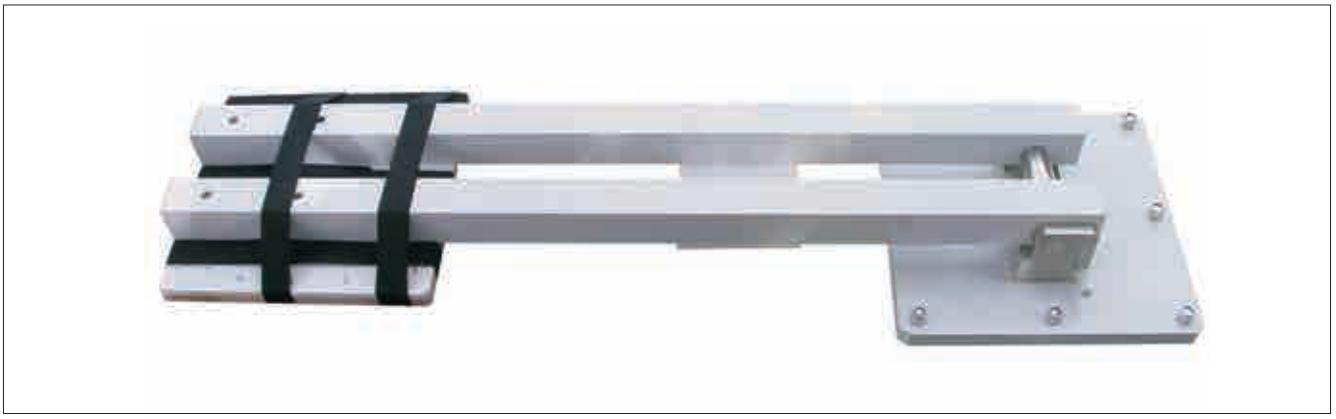

HADT-1 - lower position

prototypa
Hudcova 533/78c, 612 00 Brno
CZECH REPUBLIC
Tel: +420 544 501 800
Fax: +420 541 513 681
e-mail: pzm@prototypa.cz
www.prototypa.cz

DTVE
DROP TEST VALIDATION EQUIPMENT

DESCRIPTION

The Drop Test validation equipment (DTVE next) stand is a special device designed for backing material consistency validation of conditioned backing material in accordance with NIJ Standard-0101.06.
The main designed features are the following:

- -Conducting validation drops into the backing material;
- -Fully adjustable drop height;
- -Easy aiming;
- -Easy handling.
- -Mobile

TECHNICAL PARAMETERS

Height	2685 mm
Length	2180 mm
Width	730 mm
Drop height	2000 mm ± 15 mm
Sphere weight	1043 g ± 5 g
Sphere dimension	Ø 63.5 mm ± 0.05 mm
Fixture head weight	100 kg
Total Weight	160 kg

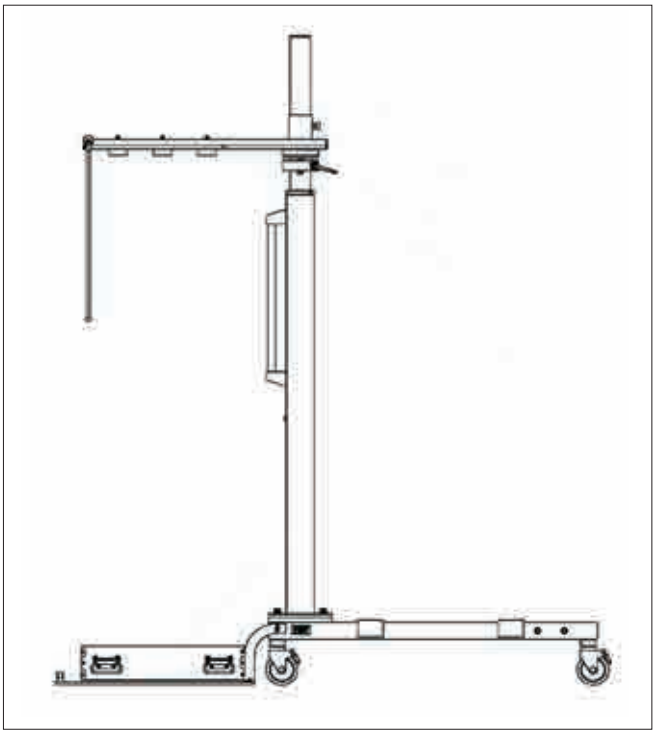

Drop test validation equipment DTVE - scheme

Front view

prototypa
Hudcova 533/78c, 612 00 Brno
CZECH REPUBLIC
Tel: +420 544 501 800
Fax: +420 541 513 681
e-mail: pzm@prototypa.cz
www.prototypa.cz

AST
ANTI STAB TESTER

TECHNICAL PARAMETERS

Height	6900 mm
Length	2200 mm
Width	1600 mm
Drop height	5000 mm
Missile weight	2100 g ± 100g
Impact energy	10 - 80 J

DESCRIPTION

The Anti Stab tester stand is a special device designed for realizing drop test according to NIJ Standard 0115.00, VPAM. The main designed features are the following:

- Conducting drop test
- Adjustable drop height
- Easy maintance
- Sturdy construction
- Velocity measurement system

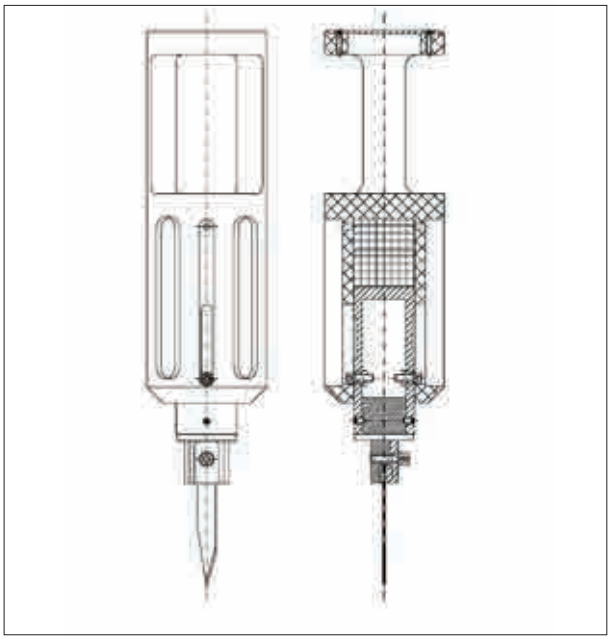

Stabbing weapons - blade, needle

Backing material fixture

BMS Software

prototypa
Hudcova 533/78c, 612 00 Brno
CZECH REPUBLIC
Tel: +420 544 501 800
Fax: +420 541 513 681
e-mail: pzm@prototypa.cz
www.prototypa.cz

HF1
Head Form

DESCRIPTION

The HF1 head form is designed for executing of ballistic tests penetration for ballistic helmets according NIJ 0106.01 Standard for Ballistic Helmets.

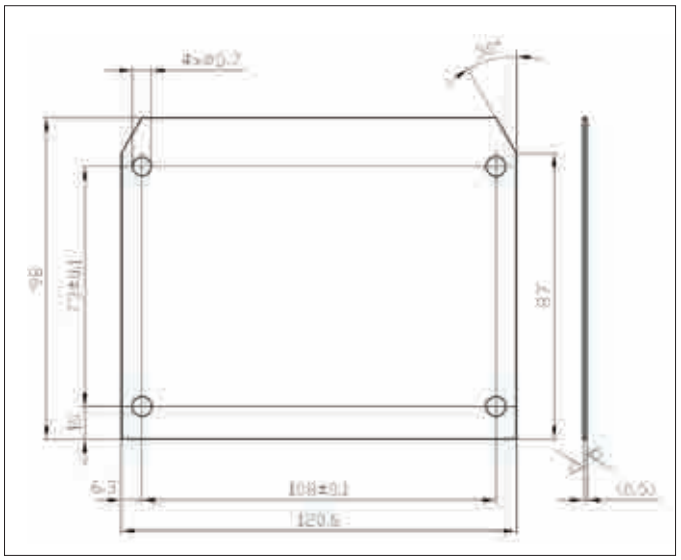

Witness plate drawing

TECHNICAL PARAMETERS

Height	300 mm
Width	250 mm
Length	250 mm
Total mass	19 kg
Helmets size	7 l/4”

Side view - option A

Side view - option B

prototypa
Hudcova 533/78c, 612 00 Brno
CZECH REPUBLIC
Tel: +420 544 501 800
Fax: +420 541 513 681
e-mail: pzm@prototypa.cz
www.prototypa.cz

SMJF
SAMPLE HOLDER

DESCRIPTION

SMJF Sample holder is steel weldment with a range of interchangeable clamping frames and folding frame for witness plate. According to the size of samples clamped protective variants exists SMJF-500 (for samples 500x500 mm) and SMJF-400 (for samples 400x400 mm).

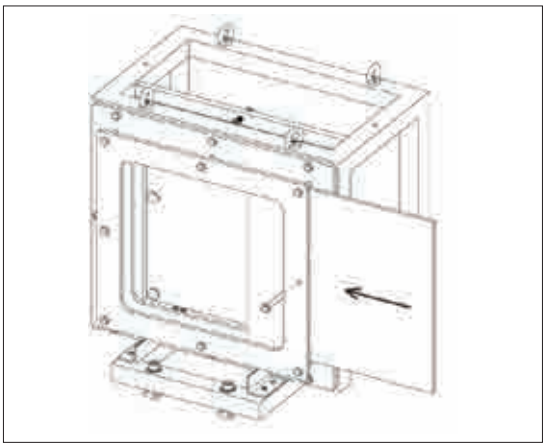

Insertion of sample

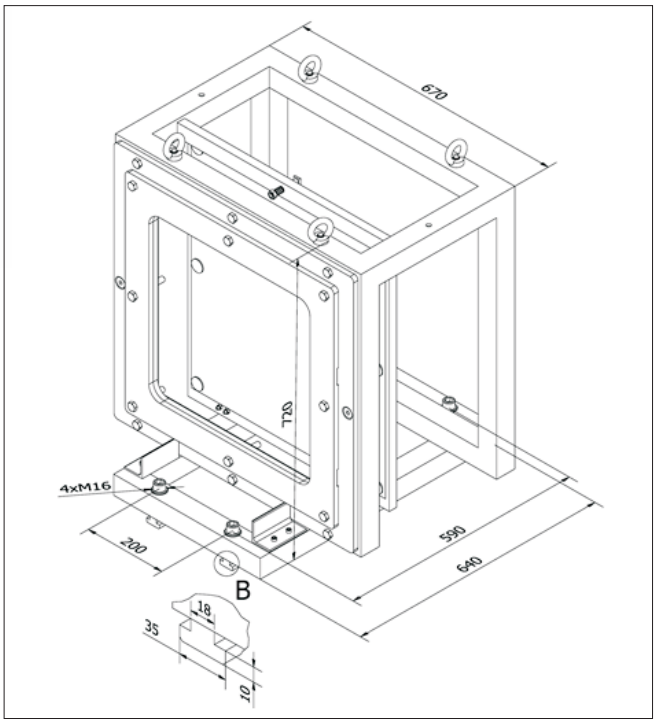

SMJF Sample holder – dimensions

TECHNICAL PARAMETERS

Height	720 / 761 mm
Length	670 mm
Width	640 mm
Total mass	115 / 145 kg
Size of clamped samples	500x500 / 400x400 mm
Size of witness plate	0.5 x 545 x 600 mm
Material of witness plate	2024-T3 or 2024-T4 aluminum alloy

prototypa
Hudcova 533/78c, 612 00 Brno
CZECH REPUBLIC
Tel: +420 544 501 800
Fax: +420 541 513 681
e-mail: pzm@prototypa.cz
www.prototypa.cz

MDTT - 2014
MOTOR - DRIVEN TARGET TABLE

TECHNICAL PARAMETERS

Height	700-1300 mm
Length	1400 mm
Width	2100 mm
Total mass	1310 kg
Revolving range / step	360° / 5°
Distance of transversal movement	± 300 mm
Maximum weight of target placed on table	1000 kg
Maximum calibre	12,7 mm
Power	3x400 V, 5 A

DESCRIPTION

The MDTT-2014 Motor driven Target Table is appointed for holding of equipment designed for executing of ballistic tests penetration such as HF1Head Form, SMJF Sample Holder or Backing material fixture. The decisive function, for those this device has been designed, are following:

- holding of special designated equipment during shooting tests

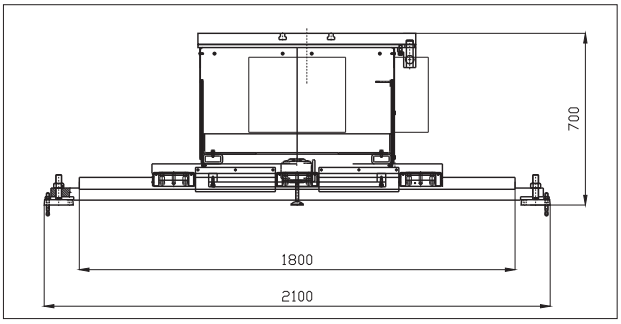

MDTT-2014 - front view (lowest position)

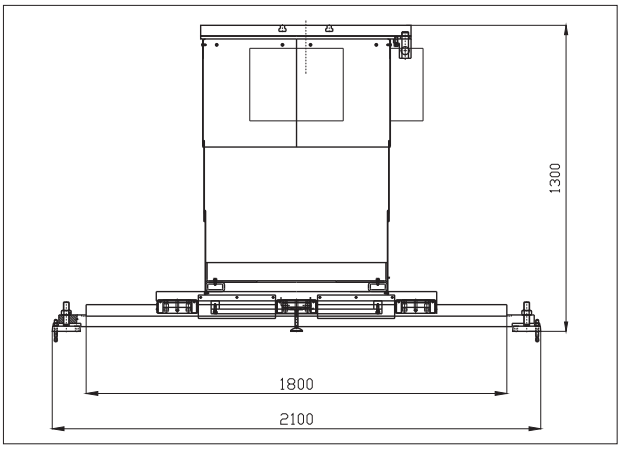

MDTT-2014 - front view (highest position)

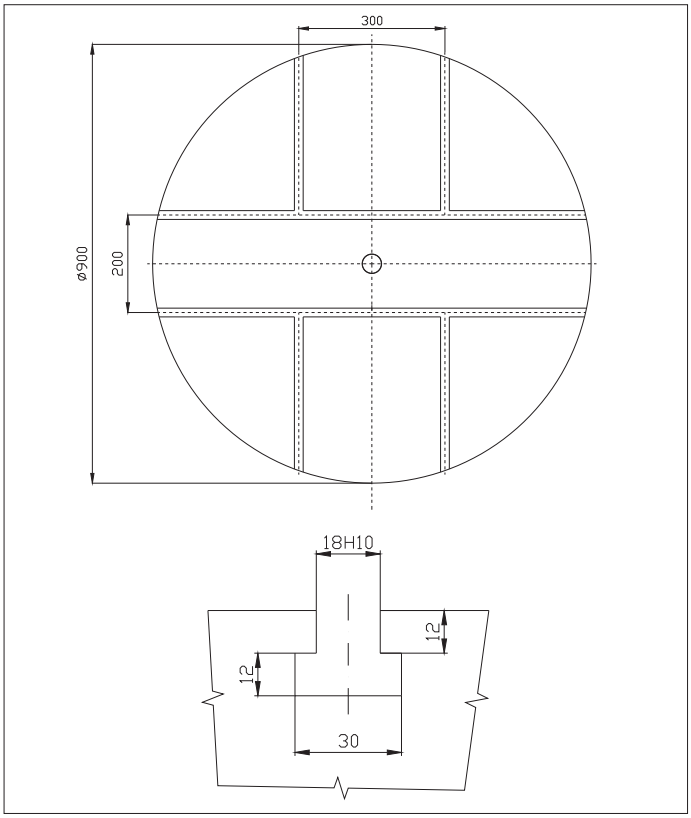

MDTT-2014 - revolving wheel, T-groove

prototypa
Hudcova 533/78c, 612 00 Brno
CZECH REPUBLIC
Tel: +420 544 501 800
Fax: +420 541 513 681
e-mail: pzm@prototypa.cz
www.prototypa.cz

STZA 16M2
MOBILE FIRING REST

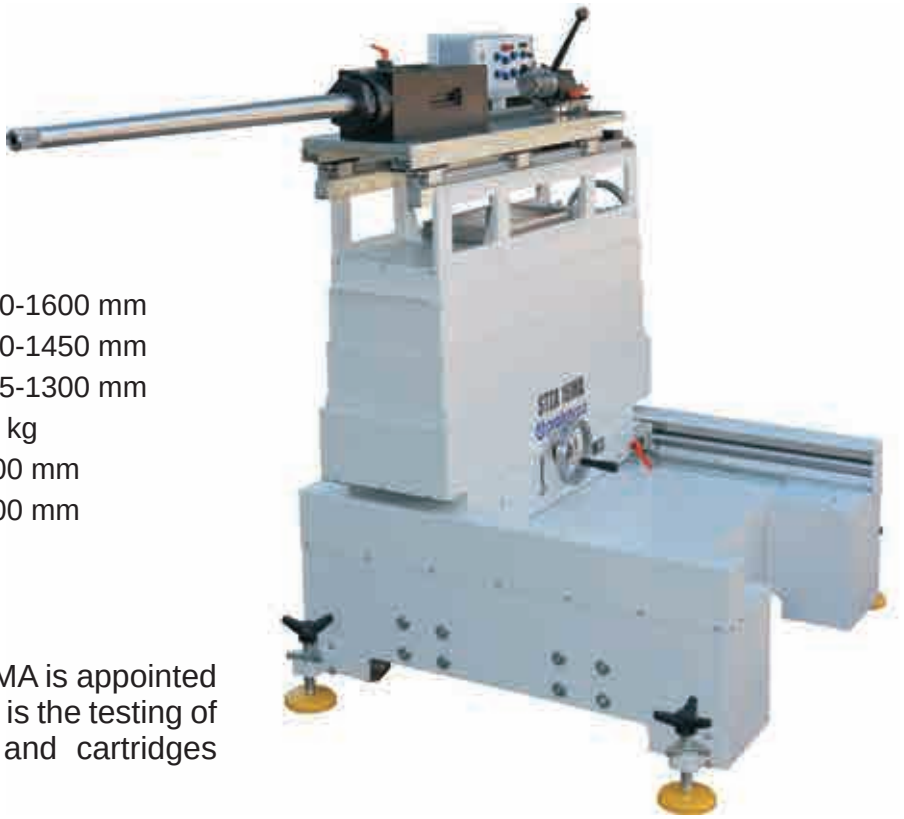

TECHNICAL PARAMETERS

Height adjustable	1000-1600 mm
Length	1400-1450 mm
Width	1055-1300 mm
Total mass	630 kg
Transversal movement	± 300 mm
Vertical movement	± 300 mm

DESCRIPTION

The Mobile firing rest STZA 16MA is appointed for working site the job of which is the testing of small arms, ballistic gauges and cartridges within the calibre up to 14,5 mm.

Firing rest STZA 16MA + UZ-2010– front view in the lowest position

Firing rest STZA 16MA + UZ-2010– back view in the highest position

prototypa
Hudcova 533/78c, 612 00 Brno
CZECH REPUBLIC
Tel: +420 544 501 800
Fax: +420 541 513 681
e-mail: pzm@prototypa.cz
www.prototypa.cz

UZ-2002
UNIVERSAL BALLISTIC BREECH

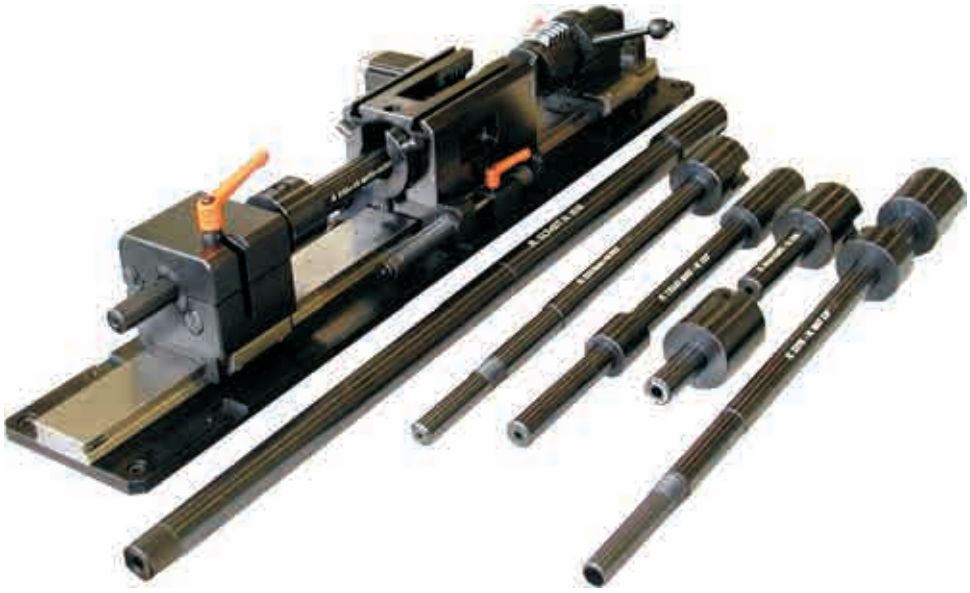

DESCRIPTION

It serves for clamping of ballistic barrels for testing of ammunition for rifles, pistols, revolvers and shotguns, and for cartridges with rim fire and for bagged cartridges for expansion apparatus. UZ-2002 is capable of clamping ballistic barrels from various manufacturers.

TECHNICAL PARAMETERS

Height	200 mm
Length	960 mm
Width	230 mm
Mass	50 kg
Caliber range (up to and including)	12,7 mm

Pistol barrel

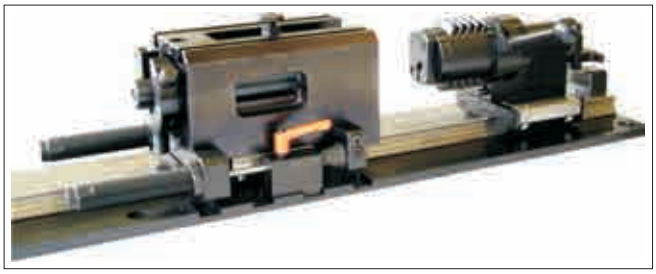

EPVAT measurement

Rifle barrel

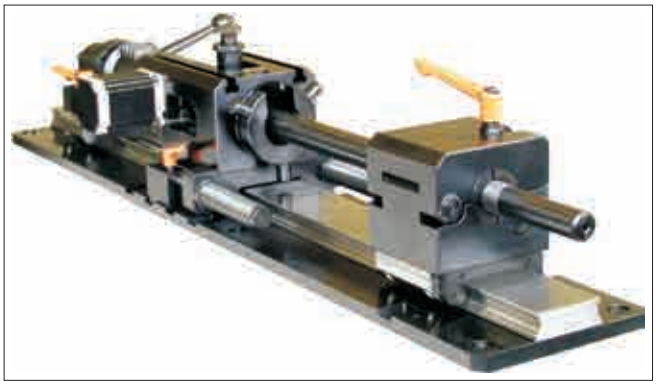

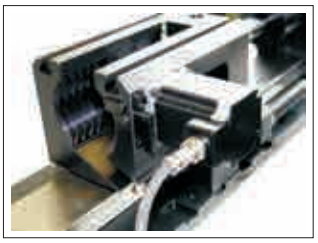

Remote and manual fire control

Action time measurement

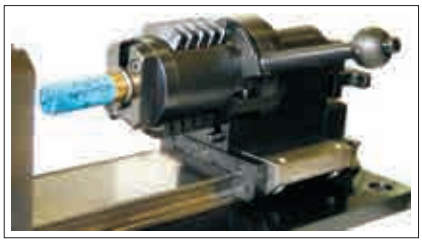

Breech block for shotguns

prototypa
Hudcova 533/78c, 612 00 Brno
CZECH REPUBLIC
Tel: +420 544 501 800
Fax: +420 541 513 681
e-mail: pzm@prototypa.cz
www.prototypa.cz

UZ-2011
UNIVERSAL BALLISTIC BREECH

UZ-2011, Recoil system, Electronic remote fire control and Support

TECHNICAL PARAMETERS

Height	170 mm
Length	500 mm
Width	250 mm
Total mass	25 kg
Caliber range (up to and including)	338 Lapua Mag.

· electronic remote fire control - electromagnetic
· optional: Recoil system, Support

UZ-2011 and Recoil system - side view

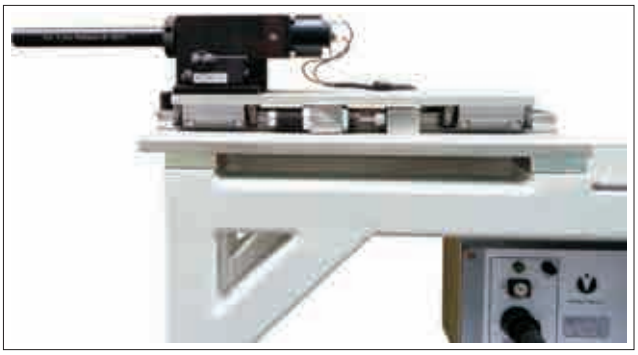

DESCRIPTION

UZ-2011 Universal ballistic breech works as a single-action manually operated weapon provided with a shift breech block used for testing of protection materials.

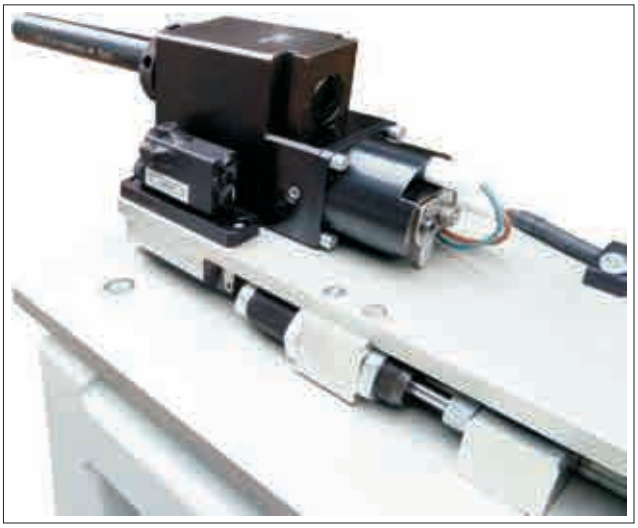

Back side view

Electronic remote fire control box

prototypa
Hudcova 533/78c, 612 00 Brno
CZECH REPUBLIC
Tel: +420 544 501 800
Fax: +420 541 513 681
e-mail: pzm@prototypa.cz
www.prototypa.cz

GM1
MOVING GUN TABLE

TECHNICAL PARAMETERS

Size - transport position (L x W x H)	5000 x 2000 x 2000 mm
Size - working position (L x W x H)	5500 x 3000 x 4000 mm
Mass	3000 kg
Elevation range	-30° ÷ 0°
Range of transversal movement	0 ... 4000 mm
Range of vertical movement	1000 ... 3500 mm
Maximum calibre	12,7 mm
Remote control box cable length	30 m
Remote firing box cable length	30 m
Power supply cable length	30 m
Power	3x400 V, 10 A

DESCRIPTION

The GM1 Moving Gun Table is appointed for holding of Universal ballistic breech UZ-2002 and its setting to the requested position in side, height and angle to shoot at the target from the requested direction.

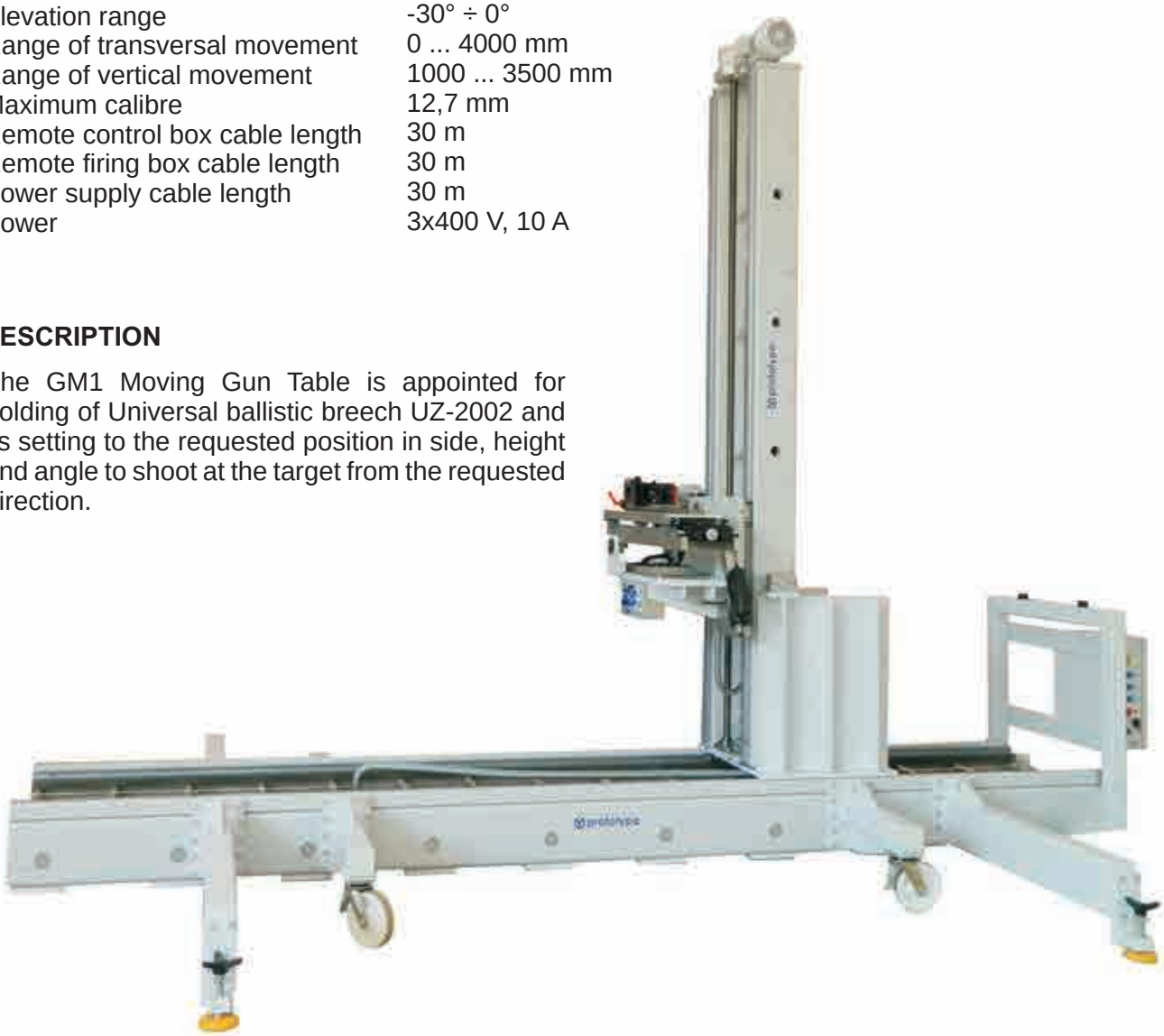

GM1 Moving Gun with UZ-2002

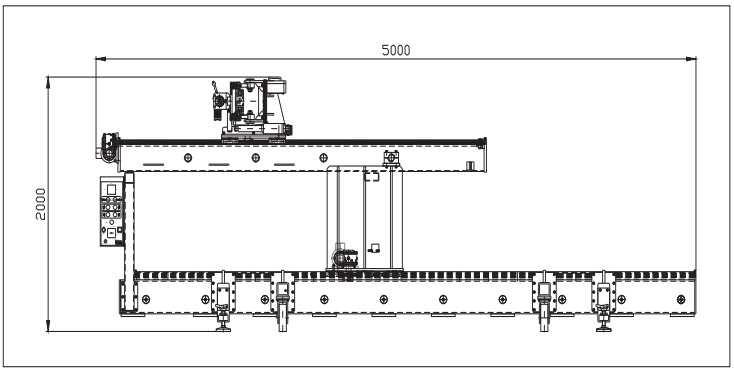

GM1 Moving Gun Table - transport position

prototypa
Hudcova 533/78c, 612 00 Brno
CZECH REPUBLIC
Tel: +420 544 501 800
Fax: +420 541 513 681
e-mail: pzm@prototypa.cz
www.prototypa.cz

VEHICLE MANIPULATOR

DESCRIPTION

The Vehicle manipulator is device allowing lifting, tilting and rotation for realizing test according AEP-55. The equipment can take a 6000 kg vehicle on its platform, Lift, Tilt and rotate it to the wanted position for test.
It consist mainly of the following components:

- tilt, lift and rotation table including hydraulic cylinders
- side extension
- support legs
- digital tilt angle measurement device
- ramps for elevation the vehicle up to the platform

TECHNICAL PARAMETERS

Size (L x W)	5 x 3 m
Lifting capacity	6000 kg
Maximum angle of lift	30°
Maximum angle of tilt	30°
Angle of rotation	360°
Total weight	6800 ± 100 kg
Power connection	3 phase 400V 32A for Hydraulic
	3 phase 400V 16A for Winch

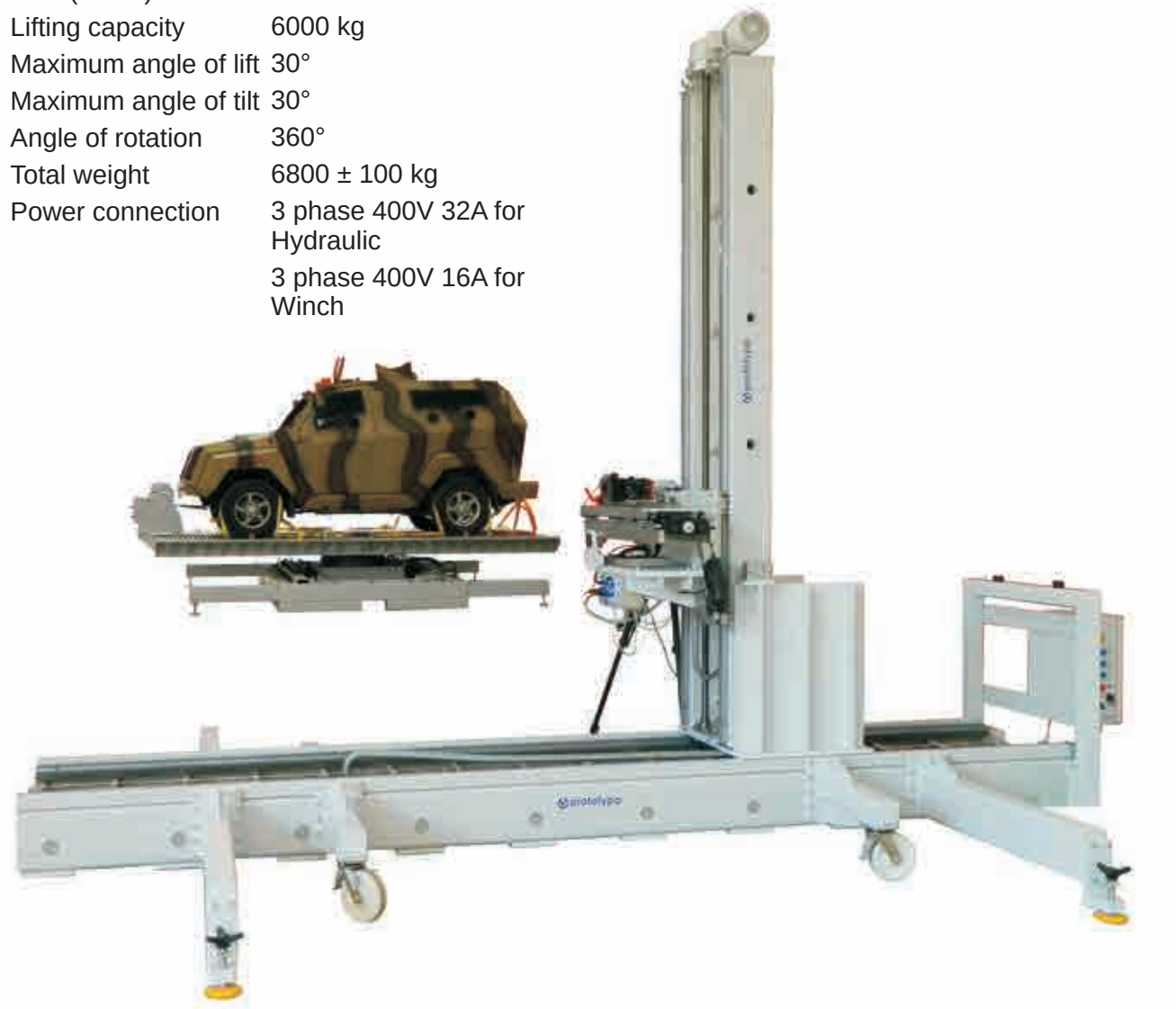

prototypa
Hudcova 533/78c, 612 00 Brno
CZECH REPUBLIC
Tel: +420 544 501 800
Fax: +420 541 513 681
e-mail: pzm@prototypa.cz
www.prototypa.cz

LS-06
INTELLIGENT LIGHT GATES

TECHNICAL PARAMETERS

Range of velocity measured	50 to 1500 $m \cdot s^{-1}$
Range of rate of fire measured	60 to 3000 min^{-1}
Range of projectile caliber	4,5 to 20 mm
Area observed	triangular 0,6 m^2
Basis	1 m, 2 m optional
Interface	WLAN, 10/100 Ethernet, RS 232

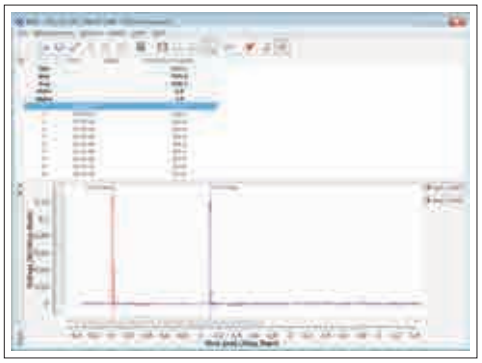

BMS Software

DESCRIPTION

- data presentation on standard PC (Desktop, Notebook)
- evaluation software suitable for Windows
- immediate display of velocity and rate of fire values
- presentation of statistically processes values (minimum, maximum, average)
- calculation drop of velocity (two Light gates required)
- optional addition of a mobile wireless terminal with touch sensitive screen
- measurement of velocity and rate of fire
- optical scanning of passage of projectile
- integrated evaluation unit equipped with WLAN communication module, Ethernet and RS 232 interface
- graphic presentation of time behaviour of values

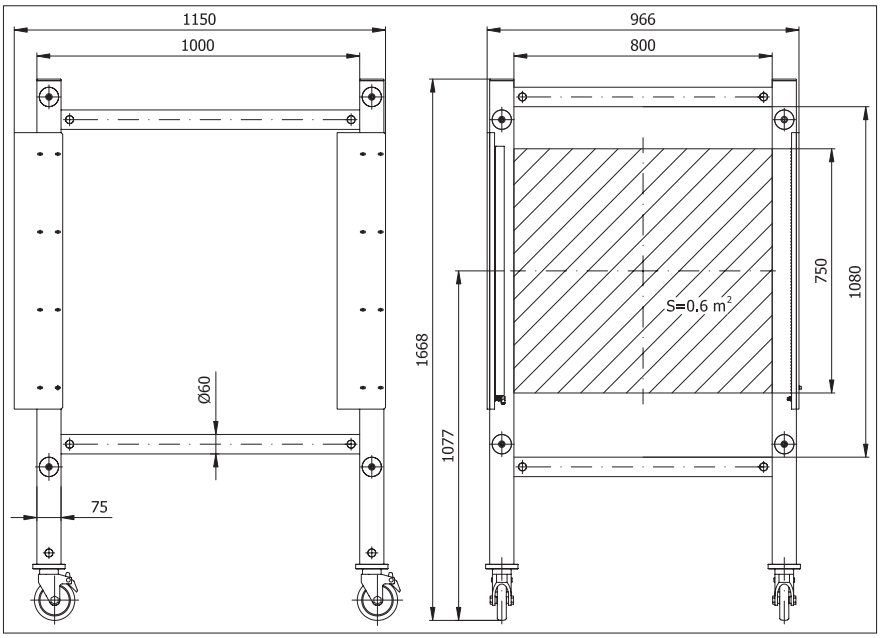

Dimensional scheme

LS-06 in use

prototypa
Hudcova 533/78c, 612 00 Brno
CZECH REPUBLIC
Tel: +420 544 501 800
Fax: +420 541 513 681
e-mail: pzm@prototypa.cz
www.prototypa.cz

PYAWMS
YAW MEASUREMENT SYSTEM

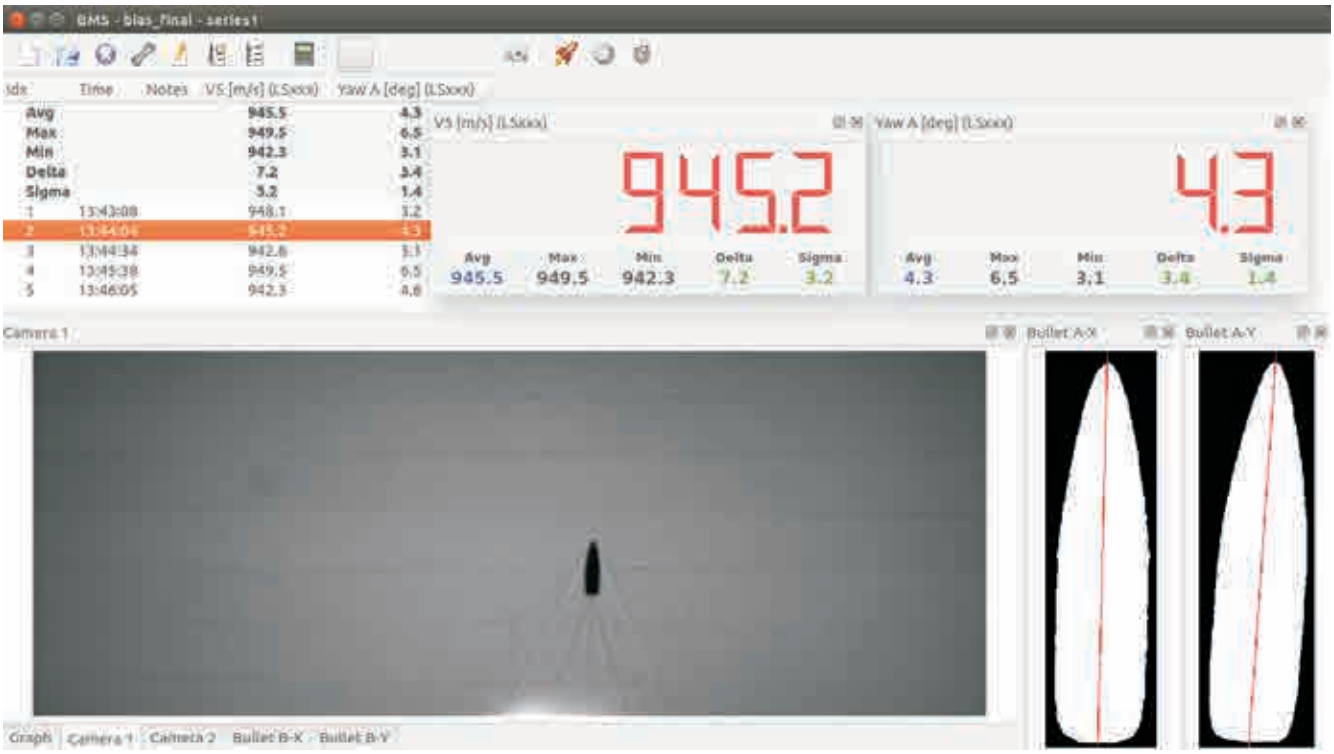

PYAWMS - Yaw measurement system was developed for measurement bullet yaw before impact on the target according AEP-55 Standard.

TECHNICAL PARAMETERS:
- Active area - dia 400mm
- Projectile velocity up to 2500 m/s
- Length of projectile up to 180mm

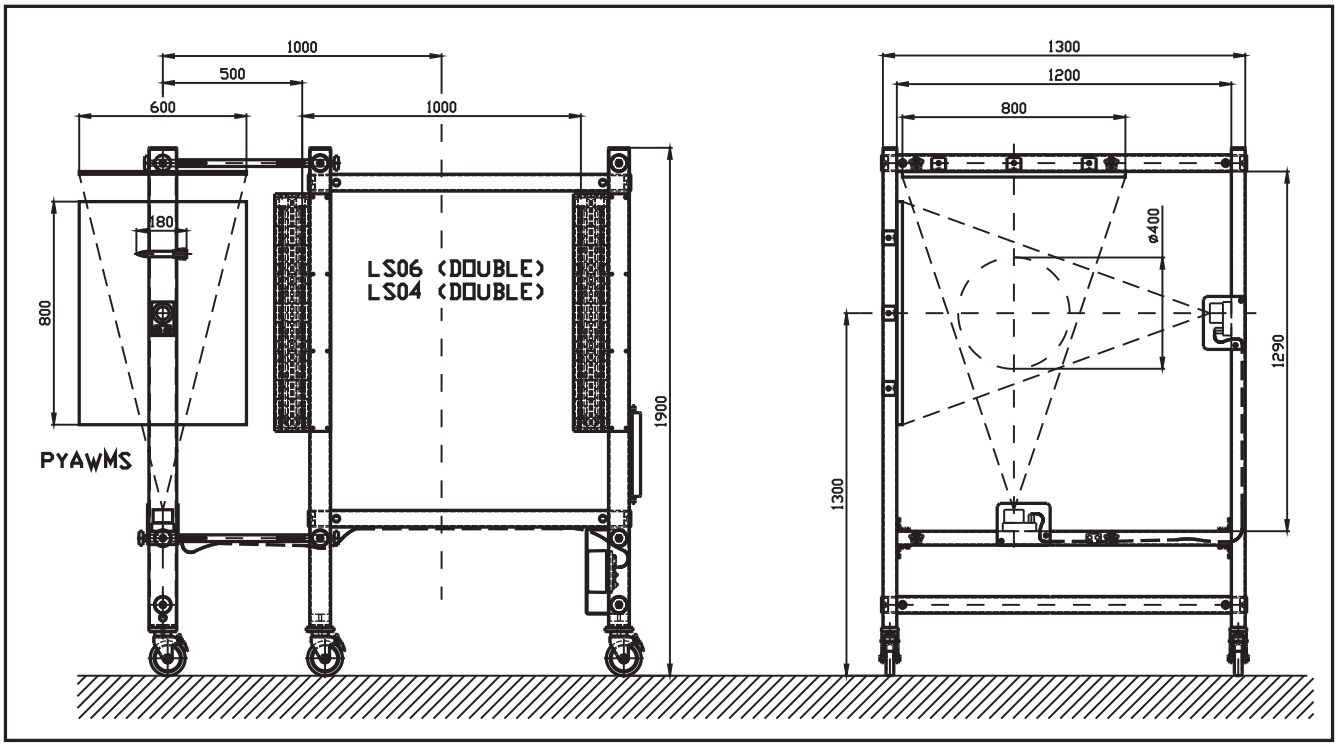

YAW measurement system assembly

prototypa
Hudcova 533/78c, 612 00 Brno
CZECH REPUBLIC
Tel: +420 544 501 800
Fax: +420 541 513 681
e-mail: pzm@prototypa.cz
www.prototypa.cz

DRS-1
DOPPLER RADAR SYSTEM

Doppler antenna


Triggering unit FD01M

DESCRIPTION

DRS-1 Doppler radar system is an equipment designed for projectile velocity measurement.

TECHNICAL PARAMETERS

Measured parameters:
dependence velocity / distance / time
dependence acceleration / distance / time

Calber range	2 to 100 mm
Velocity range	50 to 2000 $m \cdot s^{-1}$

Measuring distance
(typical measuring distance in outdoor, indoor measuring is usually longer due to reflections from walls.)

cal. 5,56 mm	60 m
cal. 7,62 mm	100 m
cal. 9 mm	150 m
cal. 12,7 mm	200 m

Velocity measurement accuarcy	0,2 %
Frequency	24,15 / 35,5 GHz (optional)
Transmitter output	100 mW
Beam width	12°
Protection	IP63

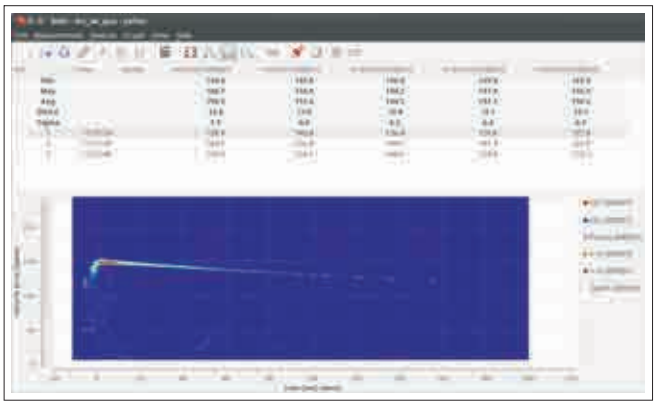
BMS Software

prototypa
Hudcova 533/78c, 612 00 Brno
CZECH REPUBLIC
Tel: +420 544 501 800
Fax: +420 541 513 681
e-mail: pzm@prototypa.cz
www.prototypa.cz

SOP-1
TYRE TESTER

External ballistic slats

TECHNICAL PARAMETERS

Size without tyre (LxWxH)	1,53 x 0,88 x 1,3 m
Overall weight (without tyre)	390 kg
Maximum weight added	250 kg
Weight of external ballistic slats	59 kg
Dimensions of V belt	17Bx11 (Lw=Lp=1160mm)
Range of temperatures	from -25°C to +40°C
Imput voltage for electronics box	400 V / 50-60 Hz / 16 A
Output voltage of electronics for micro switch	DC 33-44 V / 2 A
Length of power cable	10 m
Rotation of electromotor	720 min^{-1}
Rotation of tyre	785 min^{-1}
Accepted tyre rims	6,5x15 (5x100,ET 43), Škoda Octavia 5.5Jx15 6Jx15 6.000Gx16

DESCRIPTION

The SOP-1 Tyre tester is intended for tyres testing or testing of effectiveness of ammunition after hit of tyre. Principle of the Tyre tester is based on simulation of tyre rotation under load. Propelling of the tyre is realised by electromotor. Number of tyre revolution is rigidly taken by V belt pulleys diameter. Load of half axle simulating weight (type of weight could be optional).

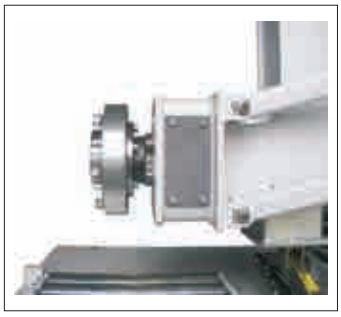

Washer for rim No. 6Jx15

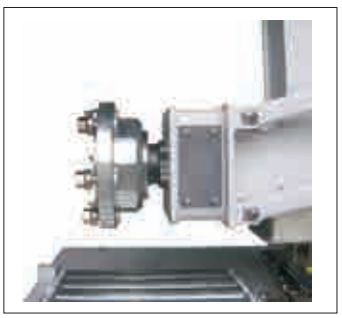

Washer for rim No. 6.00Gx16

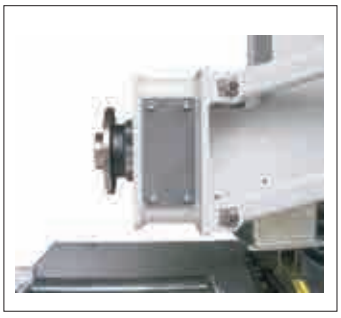

Armour plates